Electric Chain Hoists

Enhanced Features

UL® Listed*

Certified and listed to UL 1340 "Standard for Hoists."

Easy Access Suspension

External pins allow for quick change from hook to lug for trolley mount configurations on most models.

Perpendicular Orientation

PT push trolley mount and MR motorized trolley mount hoists are configured as perpendicular to the beam on single fall models. Parallel mount is available as an option.

High Strength, Corrosion and Wear Resistant Load Chain

Grade 80, super strength, nickel-plated load chain, certified to DIN standards, uses unique technology to greatly increase resistance to fatigue and wear.

Green Initiative

Built smarter without the use of harmful materials. Environmentally friendly.
RoHS compliant.

Notched Hook and Latch System

Provides positive closing and improves resistance against lateral forces standard on most models.

Unique Load Sheave

Increased number of pockets reduce chain vibration and increase chain life. 5 pockets standard; 6 pockets on smaller body hoists.

Extended Chain Life

Decreased chain wear as a result of a revolutionary heat treatment process, improved material and chain size.

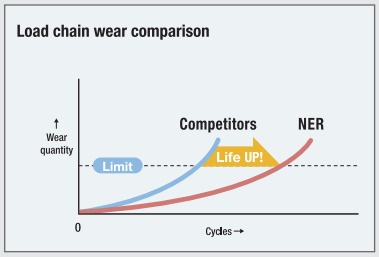

**Most models shipped with UL listing. Contact Customer Service for listed models.*

Limit Switches

Low-profile upper and lower limit switches are standard.

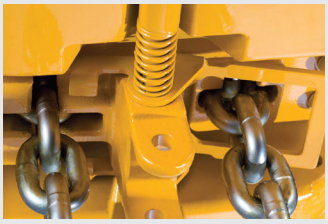

Contactors

Mechanically interlocked, heavy-duty contactors on single speed models.

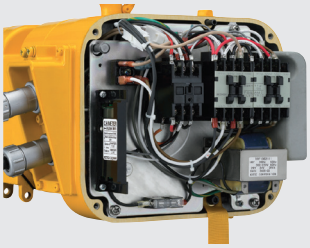

Friction Clutch and Load Brake

Friction clutch is standard on NER/ER models and friction clutch with mechanical load brake standard on ER models. Carbon friction material provides consistent performance over a wide temperature range.

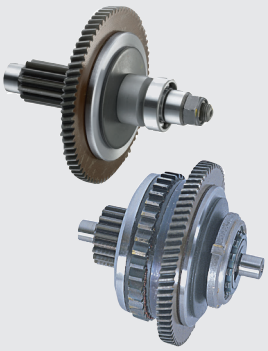

High Air Flow

Cooler motor and brake attributed to an engineered motor fin, fan blade and fan cover design.

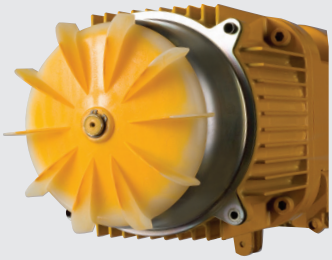

Standard Count Hour Meter

Records and displays the number of lowering starts and hoist on time which is valuable for preventive maintenance. Integral to VFD on dual speed models.

Dual Speed VFD

Under-the-cover VFD standard for dual speed hoists. Speed ratio is 6:1 with adjustability up to 12:1.

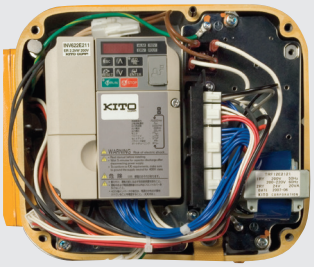

"The Guardian" Smart Brake Technology

A current driven electromagnetic brake does not release unless the motor is energized. **10 year hoist brake warranty.**

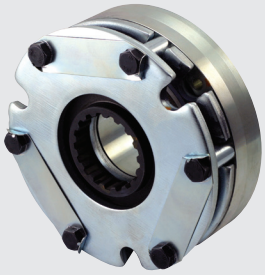

Pendant Controls

Ergonomic design for operator comfort. Red button emergency stop is standard on all 4-button and on 2-button dual speed pendants.

Electric Chain Hoists

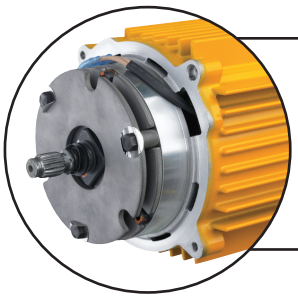

"The Guardian": Smart Brake Technology
Revolutionary DC current motor brake with electrical failsafe design.
10 year warranty.

Suspension
Hoist is easily changed from hook to lug mount configurations with external suspension pins on most models.

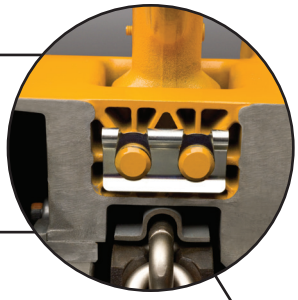

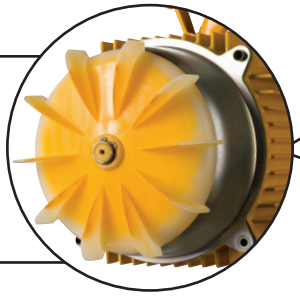

Totally Enclosed Fan Cooled (TEFC) Motor
Engineered motor fin, fan blade and fan cover design cools the motor and brake.

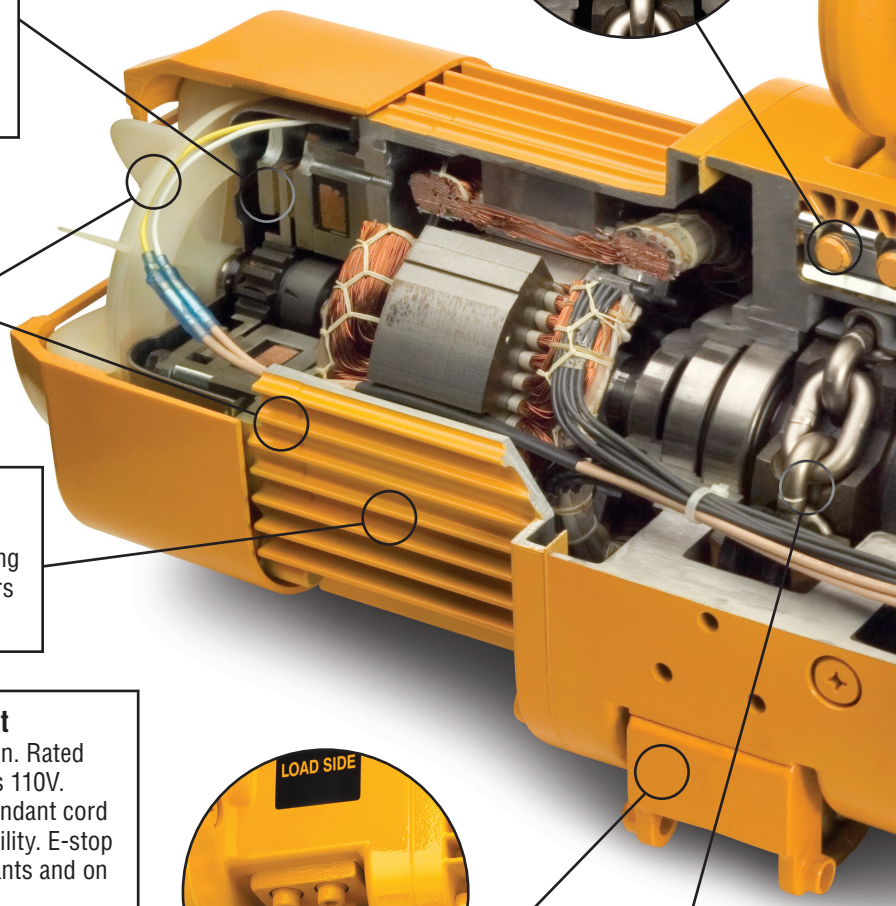

Extreme Duty Motor
Increased performance through 60 minute duty rating, H4 classification, Class B insulation, cooling fins and standard thermal motor protection. Offers higher horsepower than most competitors.

Durable Push Button Pendant
Easy to use, one-handed operation. Rated IP65. Standard control voltage is 110V. Strain relief wire is molded to pendant cord for added support and dependability. E-stop is standard on all 4-button pendants and on 2-button dual speed pendants.

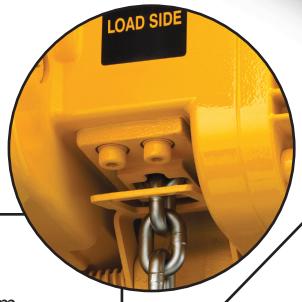

Upper/Lower Limit Switches
Low profile upper and lower limit switches provide excellent headroom.

Load Sheave
5 or 6 deep-groove pockets fully support the load chain during operation. Reduces vibration and chain wear. Provides true vertical lift.

Forged Carbon Steel Hooks
Under excessive loads will open gradually and not fracture. Ball bearings produce smooth rotation. Bottom hook will swivel 360 degrees. Heavy-duty hook latches are standard.

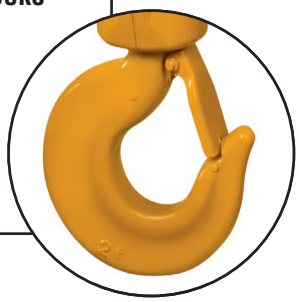

Unique Chain Guide
Provides quiet and smooth guiding of chain. Easily replaced without hoist disassembly. Heavy cast iron construction for improved wear versus stamped steel design offered by many manufacturers.

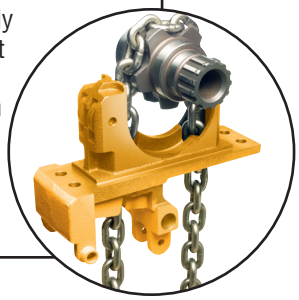

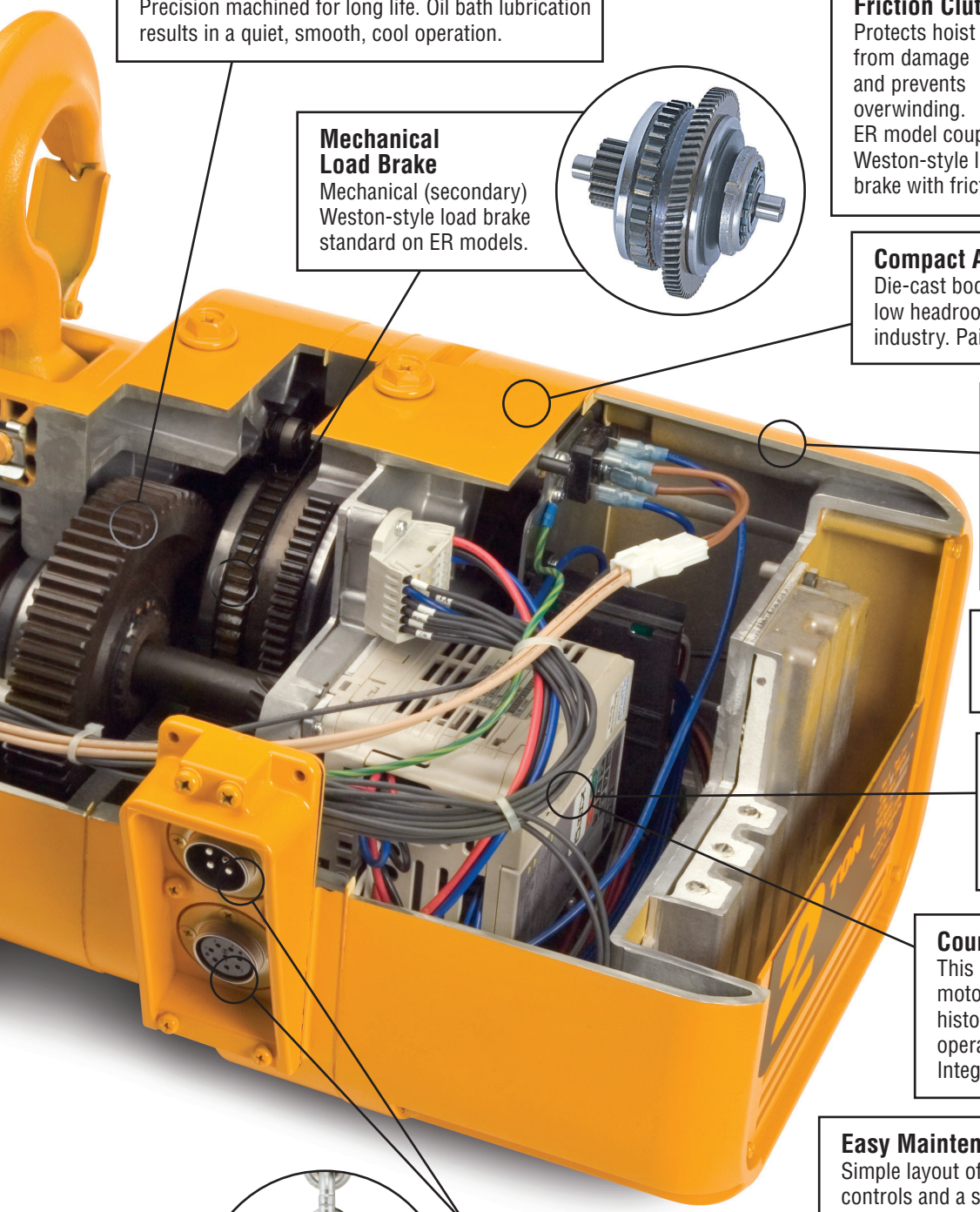

Heat Treated Helical and Spur Gears
Precision machined for long life. Oil bath lubrication results in a quiet, smooth, cool operation.

Mechanical Load Brake
Mechanical (secondary) Weston-style load brake standard on ER models.

Long Life Friction Clutch
Protects hoist from damage and prevents overwinding. ER model couples Weston-style load brake with friction clutch.

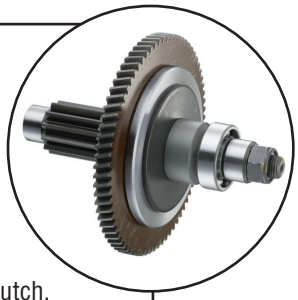

Compact Aluminum Body
Die-cast body is lightweight and offers low headroom – one of the best in the industry. Paint is electrostatically applied.

Completely Sealed Body
Suitable for both indoor and outdoor applications, including harsh environments. (Consult Owner's Manual for details.) Gaskets throughout the hoist provide for an IP55 rating.

Contactors
Mechanically interlocked heavy-duty contactors (single speed).

Variable Frequency Drive
Dual speed controls via "under-the-cover" variable frequency drive standard. Optional 2-step and 3-step infinitely variable control.

Count Hour Meter
This maintenance feature tracks motor starts, running time and usage history by instant digital display. Meter operates independently of the hoist. Integral to VFD on dual speed models.

Easy Maintenance Control Panel
Simple layout of controls and a single swing-down panel. Captured control cover provides standard wiring diagram and allows fast on-site access.

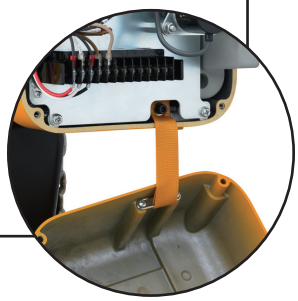

Plug-in Connections
Saves valuable time on set up and maintenance. "Quick disconnect" replaces typical competitive hard-wired designs.

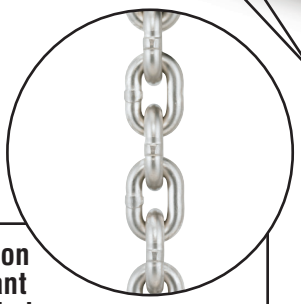

Corrosion Resistant Load Chain
Nickel-plated, Grade 80, DIN chain for superb durability and strength.

Operating Conditions
Recommended for -4° to +104° F and humidity of 85% or less.

NER/ER Electric Chain Hoists with Hook and Lug Suspensions

NER/ER010L
(Shown with optional canvas chain container)

We have added several new features and upgrades to our NER/ER Series of electric chain hoists. These improvements to our high quality, full-featured hoist include the latest technologies making these models absolutely the best electric chain hoists in the market today.

Features and Benefits

UL® Listed**
Certified and listed to UL 1340 "Standard for Hoists."

Easy Access Suspension
External pins allow for quick change from hook to lug for trolley mount configurations on most models.

Green Initiative
Built smarter without the use of harmful materials. Environmentally friendly. RoHS compliant.

Notched Hook and Latch System
Provides positive closing and improves resistance against lateral forces.

Limit Switches
Low-profile upper and lower limit switches are standard.

Extended Chain Life
Decreased chain wear as a result of a revolutionary heat treatment process, improved material and chain size.

High Air Flow
Cooler motor and brake attributed to an engineered motor fin, fan blade and fan cover design.

Unique Load Sheave
Increased number of pockets reduce chain vibration and increase chain life. 5 pockets standard; 6 pockets on smaller body hoists.

Friction Clutch and Load Brake
Friction clutch is standard on NER/ER models and friction clutch with mechanical load brake standard on ER models. Carbon friction material provides consistent performance over a wide temperature range.

Standard Count Hour Meter
Records and displays the number of lowering starts and hoist on time which is valuable for preventive maintenance. Integral to VFD on dual speed models.

Contactors
Mechanically interlocked, heavy-duty contactors on single speed models.

High Strength, Corrosion and Wear Resistant Load Chain
Grade 80, super strength, nickel-plated load chain, certified to DIN standards, uses unique technology to greatly increase resistance to fatigue and wear.

Dual Speed VFD
Under-the-cover VFD standard for dual speed hoists. Speed ratio is 6:1 with adjustability up to 12:1.

"The Guardian": Smart Brake Technology
A current driven electromagnetic brake does not release unless the motor is energized. 10 year hoist brake warranty.

Pendant Controls
Ergonomic design for operator comfort. Red button emergency stop is standard on all 2-button dual speed pendants.

Standard Hoist Specifications

Capacity Range
NER/ER – 1/8 Ton – 5 Ton
(See page 30 for 8 – 20 Ton)

Standard Voltage
208-230 / 460-3-60
Optional voltages available
Dual speed models are not reconnectable

Control Voltage
110V (optional 24V)

Duty Cycle*
Single Speed – 60 Min.
Dual Speed – 30/10 Min. with VFD

Classification*
ASME H4
ISO M5 or M4
FEM 2m or 1Am

Conformance**
UL 1340

Ratings
Hoist – IP55
Pendant – IP65

Upper/Lower Limit Switch
Overwinding / overlifting device
Standard on all models

Chain Falls***
Single chain fall through 3 Ton

Standard Lift
10' (longer lifts available)

Standard Pendant Drop
4' less than lift (longer drops available)

Standard Power Supply Length
15' (longer lengths available)

Mounting
Hook, lug or trolley

Standard Pendants
Single speed: 2-button (momentary contacts)
Dual speed: 2-button (momentary contacts) with emergency On/Off (maintained contacts)

Chain Containers
Optional
Canvas, plastic or steel

Operating Conditions
Recommended for -4° to +104° F and humidity of 85% or less.

NER vs. ER Features
ER model has same high-quality features as NER plus the following:
- Second brake — Weston-style mechanical load brake

**See page 59 for additional information.*
***Most models shipped with UL listing. Contact Customer Service for listed models.*
******The 3 Ton (N)ER030L is the previous hoist model.***

NER/ER010L
(Shown with optional canvas chain container)

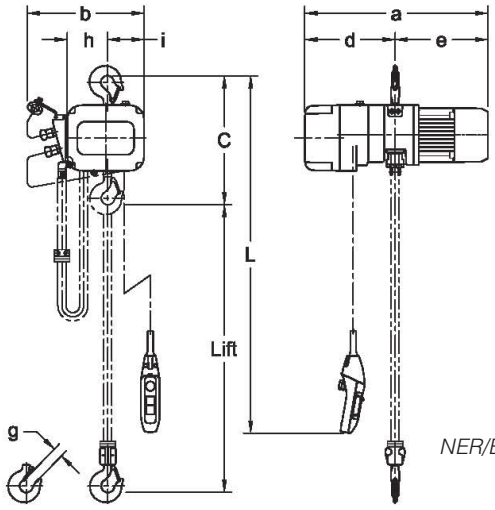

NER/ER010L

SINGLE SPEED — SPECIFICATIONS

Cap. (Tons)	Product Code	Standard Lift (ft)	Push Button Cord L (ft)	Lifting Speed (ft/min)	Lifting Motor 3 Phase 60 Hz			Load Chain Diameter (mm) x Chain Fall Lines	Net Weight (lbs)		Weight for Additional One Foot of Lift (lbs)
					Output (Hp)	Rated Current (amps)					
						@208 – 230V	@460V		NER	ER	
1/8	(N)ER001H			55	0.75	3.4	1.7	4.3 x 1	60	62	0.28
1/4	(N)ER003S			36	0.75	3.4	1.7	4.3 x 1	60	62	0.28
1/4	(N)ER003H			53	1.2	4.8	2.5	6.0 x 1	79	82	0.54
1/2	(N)ER005L			15	0.75	3.4	1.7	6.0 x 1	71	79	0.54
1/2	(N)ER005S			29	1.2	4.8	2.5	6.0 x 1	79	82	0.54
1	(N)ER010L			14	1.2	4.8	2.5	7.7 x 1	104	110	0.89
1	(N)ER010S		8.2	28	2.4	8.6	4.2	7.7 x 1	119	119	0.89
1 1/2	(N)ER015S	10		18	2.4	8.6	4.2	10.2 x 1	159	170	1.6
2	(N)ER020C			7	1.2	4.8	2.5	7.7 x 2	130	134	1.8
2	(N)ER020L			14	2.4	8.6	4.2	10.2 x 1	161	174	1.6
2	(N)ER020S			28	4.7	16.4	7.9	10.2 x 1	201	198	1.6
2 1/2	(N)ER025S			22	4.7	16.4	7.9	11.2 x 1	227	225	1.9
3	(N)ER030L*			16	4.7	18.3	9.2	12.5 x 1	256	256	2.3
3	(N)ER030C		9.2	17	4.7	16.4	7.9	10.2 x 2	234	234	3.2
5	(N)ER050L			11	4.7	16.4	7.9	11.2 x 2	289	284	3.8

The (N)ER030L listed is the previous hoist model. Refer to Harrington catalog C-EPH for features and benefits.

NER/ER Electric Chain Hoists with Hook and Lug Suspensions

NER/ER020L (Shown with optional canvas chain container)

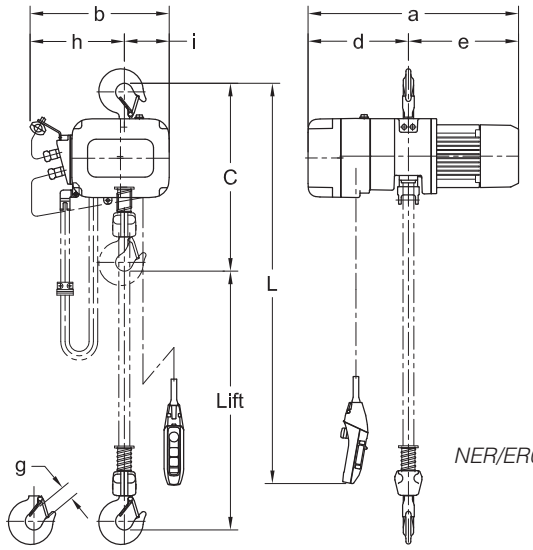

NER/ER020L

SINGLE SPEED — DIMENSIONS

Cap. (Tons)	Product Code	Headroom C (in)	a (in)		b (in)		d (in)		e (in)		g (in)	h (in)	i (in)	
			NER	ER	NER	ER	NER	ER	NER	ER			NER	ER
1/8	(N)ER001H	13.8	18.8	22.2	12.6	13.6	8.6	12.0	10.2	10.2	1.1	3.9	3.7	4.6
1/4	(N)ER003S	13.8	18.8	22.2	12.6	13.6	8.6	12.0	10.2	10.2	1.1	3.9	3.7	4.6
1/4	(N)ER003H	14.6	20.0	23.3	13.7	13.7	9.5	12.8	10.5	10.5	1.1	4.4	4.2	4.2
1/2	(N)ER005L	14.6	20.2	23.5	13.7	13.7	9.5	12.8	10.6	10.7	1.1	4.4	4.2	4.2
1/2	(N)ER005S	14.6	20.0	23.3	13.7	13.7	9.5	12.8	10.5	10.5	1.1	4.4	4.2	4.2
1	(N)ER010L	16.9	23.2	24.9	14.8	14.8	11.4	13.1	11.7	11.8	1.2	5.1	4.6	4.6
1	(N)ER010S	16.9	23.5	25.2	14.8	14.8	11.4	13.1	12.1	12.1	1.2	5.1	4.6	4.6
1 1/2	(N)ER015S	20.1	25.4	29.0	16.8	16.8	12.1	15.6	13.3	13.4	1.4	6.3	5.4	5.4
2	(N)ER020C	27.8	23.2	24.9	14.8	14.8	11.4	13.1	11.7	11.8	1.5	7.0	2.7	2.7
2	(N)ER020L	22.6	25.4	29.0	16.8	16.8	12.1	15.6	13.3	13.4	1.6	6.3	5.4	5.4
2	(N)ER020S	23.2	27.6	30.8	16.8	16.8	13.6	16.8	14.0	14.0	1.6	6.3	5.4	5.4
2 1/2	(N)ER025S	24.6	28.9	32.5	17.5	17.5	13.2	16.8	15.7	15.7	1.6	6.9	5.6	5.6
3	(N)ER030L*	26.0	30.9	30.9	18.9	18.9	15.5	15.5	15.5	15.5	1.7	7.2	6.5	6.5
3	(N)ER030C	32.9	27.6	30.8	16.8	16.8	13.6	16.8	14.0	14.0	1.8	8.5	3.2	3.2
5	(N)ER050L	33.5	28.9	32.5	17.5	17.5	13.2	16.8	15.7	15.7	1.9	9.1	3.3	3.3

The (N)ER030L listed is the previous hoist model. Refer to Harrington catalog C-EPH for features and benefits.

NER/ER010LD
(Shown with
optional canvas
chain container)

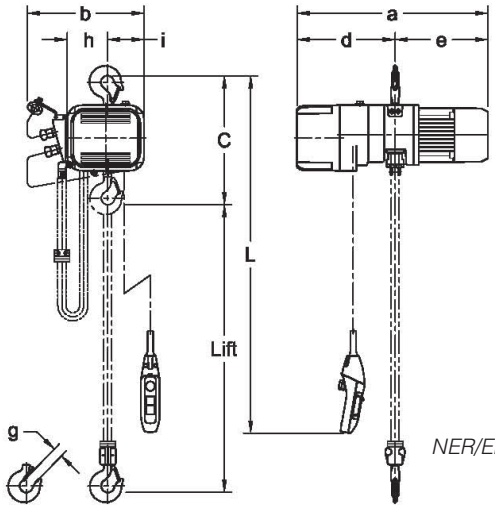

NER/ER010LD

DUAL SPEED — SPECIFICATIONS

Cap. (Tons)	Product Code	Standard Lift (ft)	Push Button Cord L (ft)	Lifting Speed (ft/min)	Lifting Motor 3 Phase 60 Hz‡			Load Chain Diameter (mm) x Chain Fall Lines	Net Weight (lbs)		Weight for Additional One Foot of Lift (lbs)
					Output (Hp)	Rated Current (amps) @208 – 230V	Rated Current (amps) @460V		NER	ER	
1/8	(N)ER001HD	10	8.2	55/9	0.75	3.6	1.8	4.3 x 1	60	64	0.28
1/4	(N)ER003SD			36/6	0.75	3.6	1.8	4.3 x 1	60	64	0.28
1/4	(N)ER003HD			53/9	1.2	5.1	2.7	6.0 x 1	77	82	0.54
1/2	(N)ER005LD			15/2.5	0.75	3.6	1.8	6.0 x 1	68	79	0.54
1/2	(N)ER005SD			29/5	1.2	5.1	2.7	6.0 x 1	77	82	0.54
1	(N)ER010LD			14/2.5	1.2	5.1	2.7	7.7 x 1	99	108	0.89
1	(N)ER010SD			28/4.5	2.4	9.1	4.5	7.7 x 1	115	117	0.89
1 1/2	(N)ER015SD			18/3	2.4	9.1	4.5	10.2 x 1	159	172	1.6
2	(N)ER020CD			7/1	1.2	5.1	2.7	7.7 x 2	123	132	1.8
2	(N)ER020LD			14/2.5	2.4	9.1	4.5	10.2 x 1	161	174	1.6
2	(N)ER020SD			28/4.5	4.7	17.3	8.3	10.2 x 1	196	203	1.6
2 1/2	(N)ER025SD			22/3.5	4.7	17.3	8.3	11.2 x 1	218	231	1.9
3	(N)ER030LD*			17/6	4.7/1.6	19.6/9.4	9.8/4.7	12.5 x 1	300	300	2.3
3	(N)ER030CD		9.2	17/3	4.7	17.3	8.3	10.2 x 2	229	238	3.2
5	(N)ER050LD			11/2	4.7	17.3	8.3	11.2 x 2	280	293	3.8

The (N)ER030LD listed is the previous hoist model. Refer to Harrington catalog C-EPH for features and benefits.

‡ Although both 208/230 & 460 Volts are shown together, the motors are NOT reconnectable.

Speed ratio is 6:1 with adjustability up to 12:1.

NER/ER Electric Chain Hoists with Hook and Lug Suspensions

NER/ER020LD (Shown with optional canvas chain container)

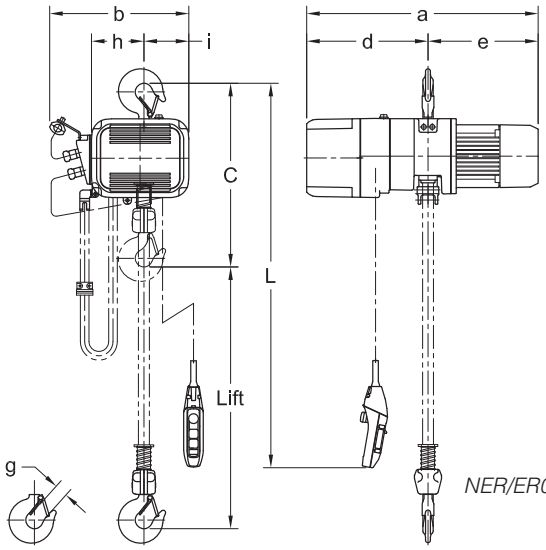

NER/ER020LD

DUAL SPEED — DIMENSIONS

Cap. (Tons)	Product Code	Headroom C (in)	a (in)		b (in)	d (in)		e (in)		g (in)	h (in)	i (in)
			NER	ER		NER	ER	NER	ER			
1/8	(N)ER001HD	13.8	21.0	22.2	13.6	10.8	12.0	10.2	10.2	1.1	3.9	4.6
1/4	(N)ER003SD	13.8	21.0	22.2	13.6	10.8	12.0	10.2	10.2	1.1	3.9	4.6
1/4	(N)ER003HD	14.6	22.3	23.3	13.7	11.8	12.8	10.5	10.5	1.1	4.4	4.2
1/2	(N)ER005LD	14.6	22.4	23.5	13.7	11.8	12.8	10.6	10.7	1.1	4.4	4.2
1/2	(N)ER005SD	14.6	22.3	23.3	13.7	11.8	12.8	10.5	10.5	1.1	4.4	4.2
1	(N)ER010LD	16.9	24.1	24.9	14.8	12.4	13.1	11.7	11.8	1.2	5.1	4.6
1	(N)ER010SD	16.9	24.5	25.2	14.8	12.4	13.1	12.1	12.1	1.2	5.1	4.6
1 1/2	(N)ER015SD	20.1	27.9	29.0	16.8	14.6	15.6	13.3	13.4	1.4	6.3	5.4
2	(N)ER020CD	27.8	24.1	24.9	14.8	12.4	13.1	11.7	11.8	1.5	7.0	2.7
2	(N)ER020LD	22.6	27.9	29.0	16.8	14.6	15.6	13.3	13.4	1.6	6.3	5.4
2	(N)ER020SD	23.2	30.2	30.8	16.8	16.2	16.8	14.0	14.0	1.6	6.3	5.4
2 1/2	(N)ER025SD	24.6	31.5	32.5	17.5	15.8	16.8	15.7	15.7	1.6	6.8	5.6
3	(N)ER030LD*	28.5	32.2	32.2	18.9	15.5	15.5	16.8	16.8	1.7	7.2	6.5
3	(N)ER030CD	32.9	30.2	30.8	16.8	16.2	16.8	14.0	14.0	1.8	8.5	3.2
5	(N)ER050LD	33.5	31.5	32.5	17.5	15.8	16.8	15.7	15.7	1.9	9.1	3.4

The (N)ER030LD listed is the previous hoist model. Refer to Harrington catalog C-EPH for features and benefits.

Speed ratio is 6:1 with adjustability up to 12:1.

NER Dual Speed Electric Chain Hoists
Smart Limit Option

NER010LD
(With Smart Limit)

Harrington's unique Smart Limit is available on NER three phase dual speed electric chain hoists. Unlike geared limit switches, this Smart Limit allows the user to add upper and lower limit positions that can be conveniently programmed at the pendant. The soft stop feature within the Smart Limit slows the hook down as it approaches each limit for smooth and very precise load positioning.

Features and Benefits

Easy Access Suspension
External pins allow for quick change from hook to lug for trolley mount configurations on most models.

Green Initiative
Built smarter without the use of harmful materials. Environmentally friendly. RoHS compliant.

Notched Hook and Latch System
Provides positive closing and improves resistance against lateral forces.

Limit Switches
Low-profile upper and lower limit switches are standard. Plus additional programmable upper and lower limit for four limit locations.

Extended Chain Life
Decreased chain wear as a result of a revolutionary heat treatment process, improved material and chain size.

High Air Flow
Cooler motor and brake attributed to an engineered motor fin, fan blade and fan cover design.

Unique Load Sheave
Increased number of pockets reduce chain vibration and increase chain life. 5 pockets standard; 6 pockets on smaller body hoists.

Friction Clutch and Load Brake
Friction clutch is standard on NER/ER models and friction clutch with mechanical load brake standard on ER models. Carbon friction material provides consistent performance over a wide temperature range.

Standard Count Hour Meter
Records and displays the number of lowering starts and hoist on time which is valuable for preventive maintenance. Integral to VFD on dual speed models.

Contactors
Mechanically interlocked, heavy-duty contactors on single speed models.

High Strength, Corrosion and Wear Resistant Load Chain
Grade 80, super strength, nickel-plated load chain, certified to DIN standards, uses unique technology to greatly increase resistance to fatigue and wear.

Dual Speed VFD
Under-the-cover VFD standard for dual speed hoists. Speed ratio is 6:1 with adjustability up to 12:1.

"The Guardian": Smart Brake Technology
A current driven electromagnetic brake does not release unless the motor is energized. 10 year hoist brake warranty.

Pendant Controls
Ergonomic design for operator comfort. Red button emergency stop is standard on all 2-button dual speed pendants.

Standard Hoist Specifications

Capacity Range
NER – 1/8 Ton – 5 Ton

Standard Voltage
208-230 / 460-3-60
Optional voltages available
Dual speed models are not reconnectable

Control Voltage
110V (optional 24V)

Duty Cycle*
Dual Speed – 30/10 Min. with VFD

Classification*
ASME H4
ISO M5 or M4
FEM 2m or 1Am

Ratings
Hoist – IP55
Pendant – IP65

Upper/Lower Limit Switch
Overwinding / overlifting device
Plus additional programmable upper and lower limit for four limit locations

Chain Falls
Single chain fall through 3 Ton

Standard Lift
10' (longer lifts available)

Standard Pendant Drop
4' less than lift (longer drops available)

Standard Power Supply Length
15' (longer lengths available)

Mounting
Hook, lug or trolley

Standard Pendants
Dual speed: 2-button (momentary contacts) with emergency On/Off (maintained contacts)

Chain Containers
Optional
Canvas, plastic or steel

Operating Conditions
Recommended for -4° to +104° F and humidity of 85% or less

*See page 59 for additional information.

NER010LD (With Smart Limit)

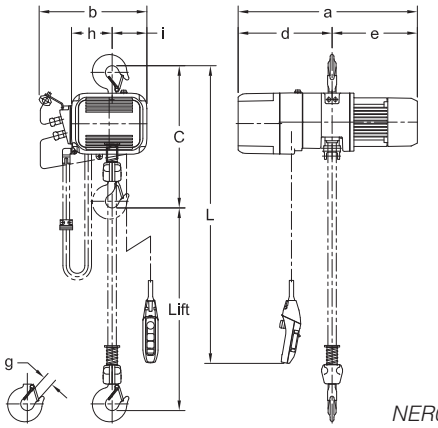

NER020LD (With Smart Limit)

NER DUAL SPEED HOISTS WITH SMART LIMIT — SPECIFICATIONS

Cap. (Tons)	Product Code	Std. Lift (ft)	Push Button Cord L (ft)	Lifting Speed (ft/min)	Lifting Motor 3 Phase 60 Hz*			Load Chain Diameter (mm) x Chain Fall Lines	Net Weight (lbs)	Weight for Additional One Foot of Lift (lbs)
					Output (Hp)	Rated Current (amps)				
						@208 – 230V	@460V		NER	
1/8	NER001HD	10	8.2	55/9	0.75	3.6	1.8	4.3 x 1	60	0.28
1/4	NER003SD			36/6	0.75	3.6	1.8	4.3 x 1	60	0.28
1/4	NER003HD			53/9	1.2	5.1	2.7	6.0 x 1	77	0.54
1/2	NER005LD			15/2.5	0.75	3.6	1.8	6.0 x 1	68	0.54
1/2	NER005SD			29/5	1.2	5.1	2.7	6.0 x 1	77	0.54
1	NER010LD			14/2.5	1.2	5.1	2.7	7.7 x 1	99	0.89
1	NER010SD			28/4.5	2.4	9.1	4.5	7.7 x 1	115	0.89
1 1/2	NER015SD			18/3	2.4	9.1	4.5	10.2 x 1	159	1.6
2	NER020CD			7/1	1.2	5.1	2.7	7.7 x 2	123	1.8
2	NER020LD			14/2.5	2.4	9.1	4.5	10.2 x 1	161	1.6
2	NER020SD			28/4.5	4.7	17.3	8.3	10.2 x 1	196	1.6
2 1/2	NER025SD			22/3.5	4.7	17.3	8.3	11.2 x 1	218	1.9
3	NER030CD		9.2	17/3	4.7	17.3	8.3	10.2 x 2	229	3.2
5	NER050LD			11/2	4.7	17.3	8.3	11.2 x 2	280	3.8

Although 208/230 & 460 Volts are shown, voltage can **NOT be changed, due to electrical components being voltage specific.*

NER DUAL SPEED HOISTS WITH SMART LIMIT — DIMENSIONS

Cap. (Tons)	Product Code	Headroom C (in)	a (in)	b (in)	d (in)	e (in)	g (in)	H (in)	i (in)
1/8	NER001HD	13.8	21.0	13.6	10.8	10.2	1.1	3.9	4.6
1/4	NER003SD	13.8	21.0	13.6	10.8	10.2	1.1	3.9	4.6
1/4	NER003HD*	14.6	22.3	13.7	11.8	10.5	1.1	4.4	4.2
1/2	NER005LD**	14.6	22.4	13.7	11.8	10.6	1.1	4.4	4.2
1/2	NER005SD*	14.6	22.3	13.7	11.8	10.5	1.1	4.4	4.2
1	NER010LD	16.9	24.1	14.8	12.4	11.7	1.2	5.1	4.6
1	NER010SD	16.9	24.5	14.8	12.4	12.1	1.2	5.1	4.6
1 1/2	NER015SD	20.1	27.9	16.8	14.6	13.3	1.4	6.3	5.4
2	NER020CD	27.8	24.1	14.8	12.4	11.7	1.5	7.0	2.7
2	NER020LD	22.6	27.9	16.8	14.6	13.3	1.6	6.3	5.4
2	NER020SD	23.2	30.2	16.8	16.2	14.0	1.6	6.3	5.4
2 1/2	NER025SD	24.6	31.5	17.5	15.8	15.7	1.6	6.8	5.6
3	NER030CD	32.9	30.2	16.8	16.2	14.0	1.8	8.5	3.2
5	NER050LD	33.5	31.5	17.5	15.8	15.7	1.9	9.1	3.4

**For 460V-3-60 NER003HD and NER005SD, Dimension a = 22.9 in. and Dimension d = 12.3 in.*
***For 460V-3-60 NER005LD, Dimension a = 23.0 in and Dimension d = 12.3 in.*